Specification

For

LCD Module

CCM1624CBW

ELUMILED.COM

Prepared by: _____
Checked by: _____
Approved by: _____

CCM1624CBWES2 LCD MODULE

1.FEATURES

- Display Type: STN
- Display Format: 16 Characters x 2 Lines
- Input Data: 4-Bits or 8-Bits interface available
- Display Font: 5 x 7 Dots
- Display Mode: BLUE
- Driving Mode: 1/16Duty, 1/5Bias
- Operating Voltage: 5.0V
- Viewing Direction: 6 O'clock
- LED Backlight: WHITE

2.ABSOLUTE MAXIMUM RATING

Item	Symbol	Min.	Max.	Unit
Power Supply for Logic	VDD	-0.3	+7.0	V
Power Supply for LCD Drive	Vlcd	-0.3	13.0	V
Input Voltage	Vin	-0.3	VDD+0.3	V
Operating Temperature	Ta	-20	+70	℃
Storage Temperature	Tsto	-30	+80	℃

3.MECHANICAL PARAMETERS

Item	Description	Unit
LCM Outline Dimension	122.0 x 44.0 x14.5	mm
Viewing Area	99.0 x 24.0	mm
Weight	70	g

ELUMILED.COM

4.SYSTEM BLOCK DIAGRAM

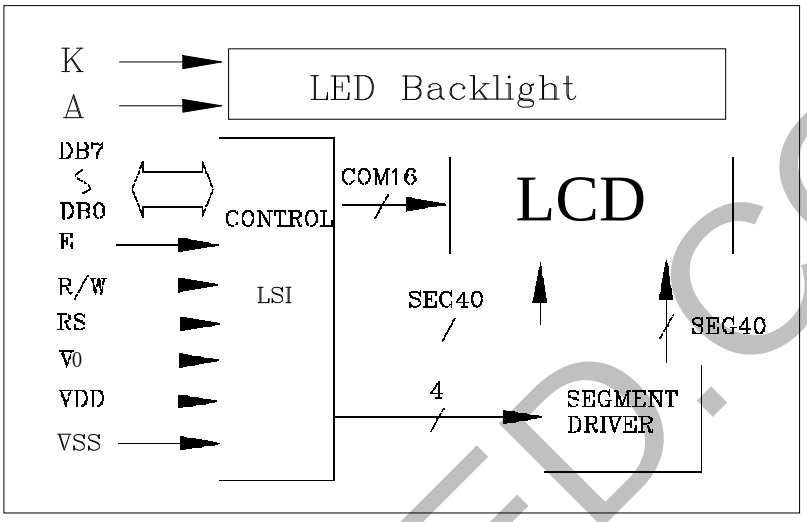

5.PIN ASSIGNMENT

NO.	Symbol	Level	Function	
16	LEDK	0V	LED Backlight (-)	
15	LEDA	5.0V	LED Backlight (+)	
14	Vss	--	0V	Power Supply
13	Vdd	--	+5.0V	
12	Vee	--	For LCD	
11	RS	H/L	Register Select	H: Data register L:Instruction register
10	R/W	H/L	H--Read	L--Write
9	E	H, H-L	Enable Signal	
8	DB0	H/L	Data bus used in 8 bit transfer	
7	DB1	H/L		
6	DB2	H/L		
5	DB3	H/L		
4	DB4	H/L	Data bus for both 4 and 8 bit transfer	
3	DB5	H/L		
2	DB6	H/L		
1	DB7	H/L		

ELUMILED.COM

6.DC CHARACTERISTICS (ST0066U-0B,Ta=25℃; VDD=5.0V±5%,VSS=0V)

Item	Symbol	Test Condition	Min.	Typ.	Max.	Unit
Operating Voltage	VDD	-	4.75	5.0	5.25	V
LCD Voltage	Vlcd	VDD-VEE	--	5.0	--	V
Power Supply Current	Icc	VDD=5V	-	1.4	2.1	mA
Input High Voltage (Except OSC1)	Vih1	-	2.2	-	VDD	V
InputLow”Voltage (Except OSC1)	Vil1	-	-0.3	-	0.6	V
Input High Voltage (OSC1)	Vih2	-	VDD-1.0	-	VDD	V
Input Low Voltage (OSC2)	Vil2	-	-	-	1.0	V
Output High Voltage (DB0-DB7)	Voh1	Ioh=-0.1mA	2.4	-	VDD	V
Output Low Voltage (DB0-DB7)	Vol1	Iol=0.1mA	-	-	0.4	V
Output High Voltage (Except DB0-DB7)	Voh2	Ioh=-0.04mA	0.9VDD		VDD	V
Output Low Voltage (Except DB0-DB7)	Vol2	Iol=0.04mA	-	-	0.1VDD	V
Common Resistance	Rcom	Vlcd=4V Id=0.05mA	-	2	20	KΩ
Segment Resistance	Rseg	Vlcd=4V Id=0.05Ma	-	2	30	KΩ
Input Leakage Current	Ileak	Vin=0V to VDD	-1-	-	1	μA
Pull Up MOS Current	Ipup	VDD=5V	10	50	120	μA

ELUMILED.COM

7.AC CHARACTERISTICS (VDD=5.0V±5%,VSS=0V, Ta=25℃)

(Write mode)

Characteristic	Symbol	Min.	Typ.	Max.	Unit
E Cycle Time	Tc	1200	--	--	ns
E Rise/Fall Time	Tr, Tf	--	--	25	ns
E Pulse Width (High, Low)	Tw	140	--	--	ns
R/W and RS Set-up Time	Tsu1	0	--	--	ns
R/W and RS Hold Time	Th1	10	--	--	ns
Data Set-up Time	Tsu2	40	--	--	ns
Data Hold Time	Th2	10	--	--	ns

(Read mode)

Characteristic	Symbol	Min.	Typ.	Max.	Unit
E Cycle Time	Tc	1200	--	--	ns
E Rise/Fall Time	Tr, Tf	--	--	25	ns
E Pulse Width (High, Low)	Tw	140	--	--	ns
R/W and RS Set-up Time	Tsu	0	--	--	ns
R/W and RS Hold Time	Th	10	--	--	ns
Data Output Delay Time	Td	--	--	100	ns
Data Hold Time	Tdh	10	--	--	ns

8.WRITE MODE TIMING DIAGRAM

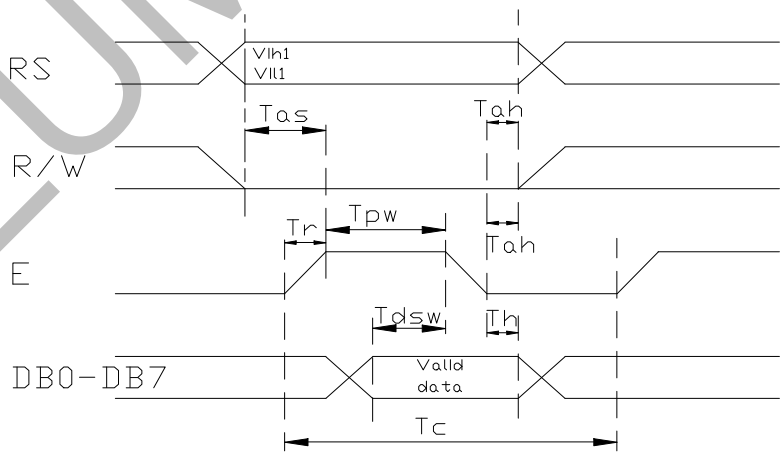

ELUMILED.COM

9.READ MODE TIMING DIAGRAM

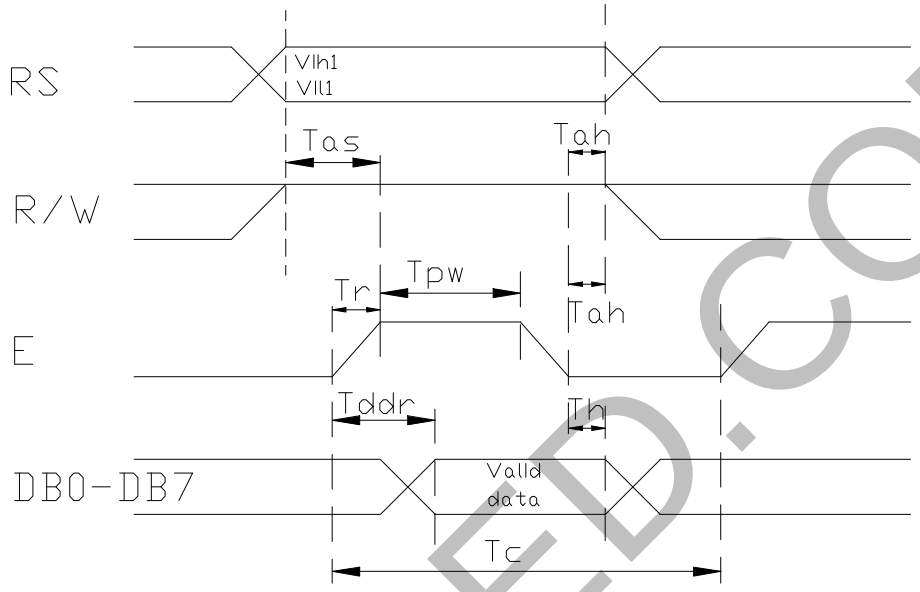

10.LED BACKLIGHT **CHARACTERISTICS**

Characteristic	Symbol	Min.	Typ.	Max.	Conditions	Unit
OperatingVoltage	Vdd	--	3.2	--	IF=30mA	V
Forward Current	IF	20	30	32	--	mA
Reverse Voltage	VR	--	--	4	--	V
Reverse Current	IR	--	--	100	VR=4V	μA

ELUMILED.COM

11.CONTROL AND DISPLAY COMMAND

"X": Don't Care

Command	RS	R/W	DB7	DB6	DB5	DB4	DB3	DB2	DB1	DB0	Remark
Display Clear	L	L	L	L	L	L	L	L	L	H	Write "20H" to DDRAM.and set DDRAM address to "00H" from AC.
Return Home	L	L	L	L	L	L	L	L	H	X	Set DDRAM address to'00H" from AC and return cursor to it's original position if shifted. The contents of DDRAM are not changed.
Entry Mode Set	L	L	L	L	L	L	L	H	I/D	S	Assign cursor moving direction and make shift of entire display enable.
Display On/Off Control	L	L	L	L	L	L	H	D	C	B	Set display (D), cursor (C), and blinking of cursor(B) on/off control bit.
Cursor or Display Shift	L	L	L	L	L	H	S/C	R/L	X	X	Set cursor moving and display shift control bit, and the direction, without changing of DDRAM data.
Set Function	L	L	L	L	H	DL	N	F	X	X	Set interface data length(DL: 4-bit/8bit), numbers of display line(N:1-line/2line), display font type(F:5X8 dots/5X11 dots)
Set CGRAM Address	L	L	L	H	AC5	AC4	AC3	AC2	AC1	AC0	Set CGRAM address in address counter.
Set DDRAM Address	L	L	H	AC6	AC5	AC4	AC3	AC2	AC1	AC0	Set DDRAM address in address counter.
Read Busy Flag & Address	L	H	BF	AC6	AC5	AC4	AC3	AC2	AC1	AC0	Whether during internal operation or not can be known by reading BF. The contents of address counter can also be read.
Write Data to RAM	H	L	D7	D6	D5	D4	D3	D2	D1	D0	Write data into internal DDRAM/CGRAM)
Read Data from RAM	H	H	D7	D6	D5	D4	D3	D2	D1	D0	Read data from internal DDRAM/CGRAM.

ELUMILED.COM

12.FONT TABLE

NO.7066-0B

b7-b4 / b3-b0	0000	0001	0010	0011	0100	0101	0110	0111	1000	1001	1010	1011	1100	1101	1110	1111
0000	CG RAM (1)															
0001	(2)															
0010	(3)															
0011	(4)															
0100	(5)															
0101	(6)															
0110	(7)															
0111	(8)															
1000	(1)															
1001	(2)															
1010	(3)															
1011	(4)															
1100	(5)															
1101	(6)															
1110	(7)															
1111	(8)															

ELJMLED.COM

13.ASSEMBLY DIAGRAM

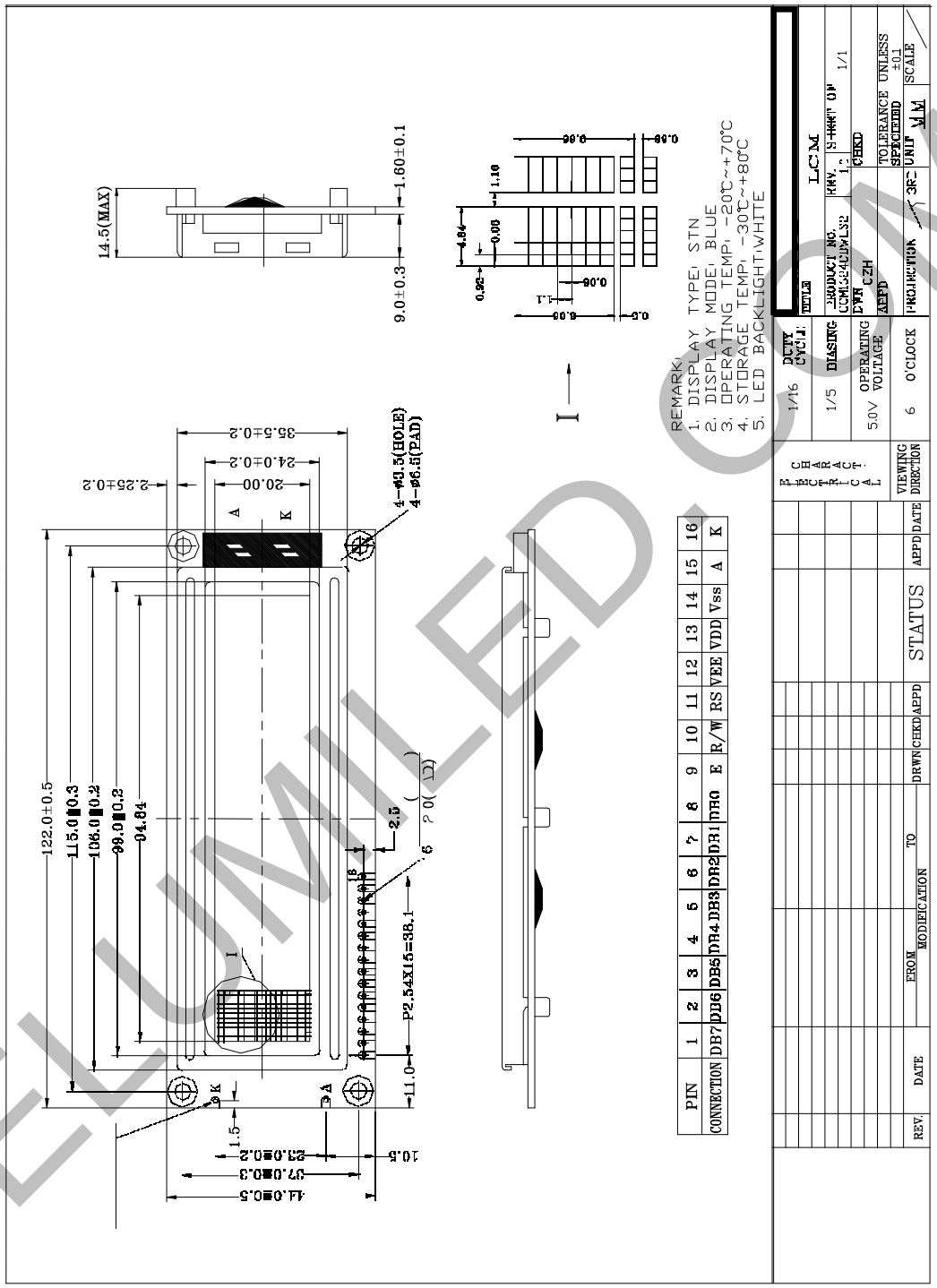

ELUMILED.COM